DILLINGHAM SENIOR CENTER
REPAIRS DESIGN
141 MAIN STREET
DILLINGHAM, ALASKA 99576

SHEET NOTES

1. (E) FOUNDATION TO REMAIN.
2. PROVIDE NEW FOUNDATION.
3. (E) FLOOR FRAMING TO REMAIN.
4. REMOVE (E) FLOOR FRAMING & PROVIDE NEW SLAB OR FLOOR FRAMING.
5. REMOVE & REPLACE (E) WALL FRAMING & WINDOWS/DOORS.
6. REMOVE & REPLACE (E) ROOF FRAMING & METAL ROOF.
7. (E) ROOF & ROOF FRAMING TO REMAIN.
8. NEW STORM DRAIN SYSTEM TO BE DESIGNED.

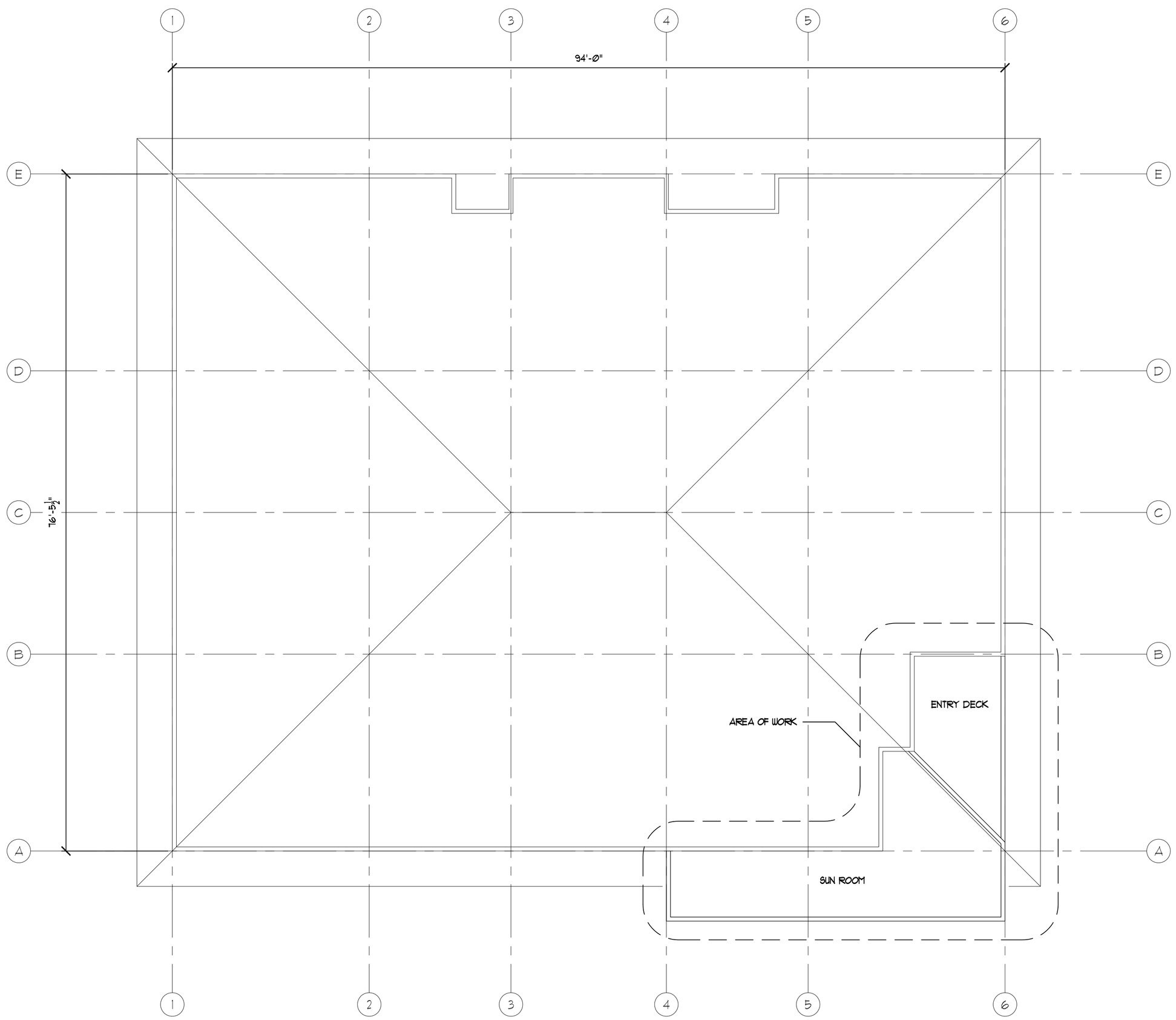

1/A1 Floor Plan
Scale: ⅛" = 1'-0"

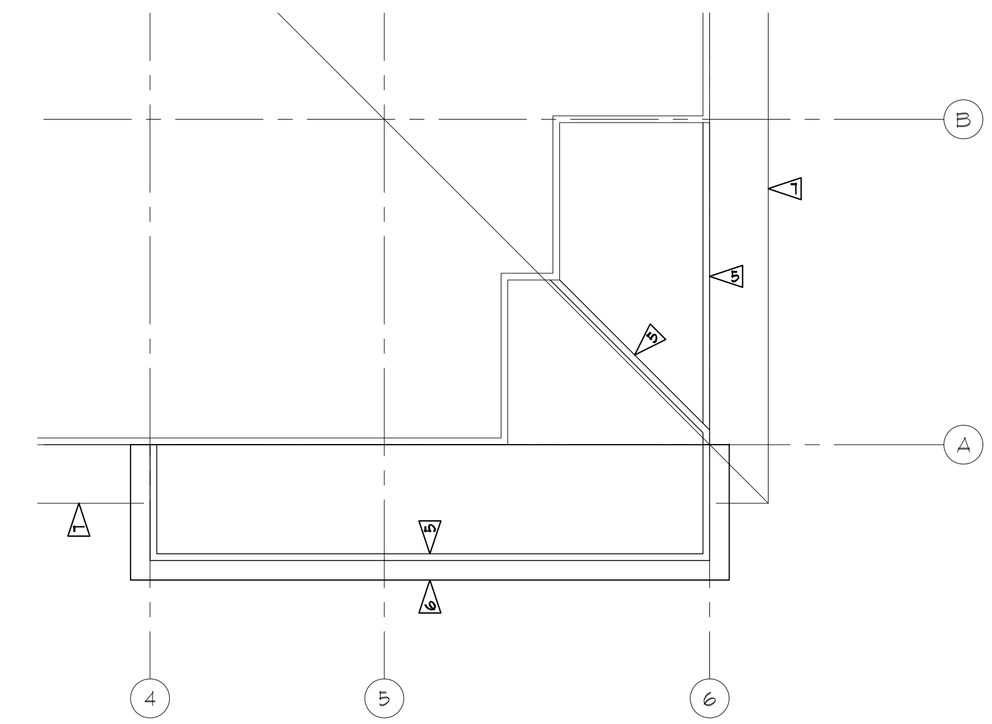

3/A1 Partial Roof Plan
Scale: ⅛" = 1'-0"

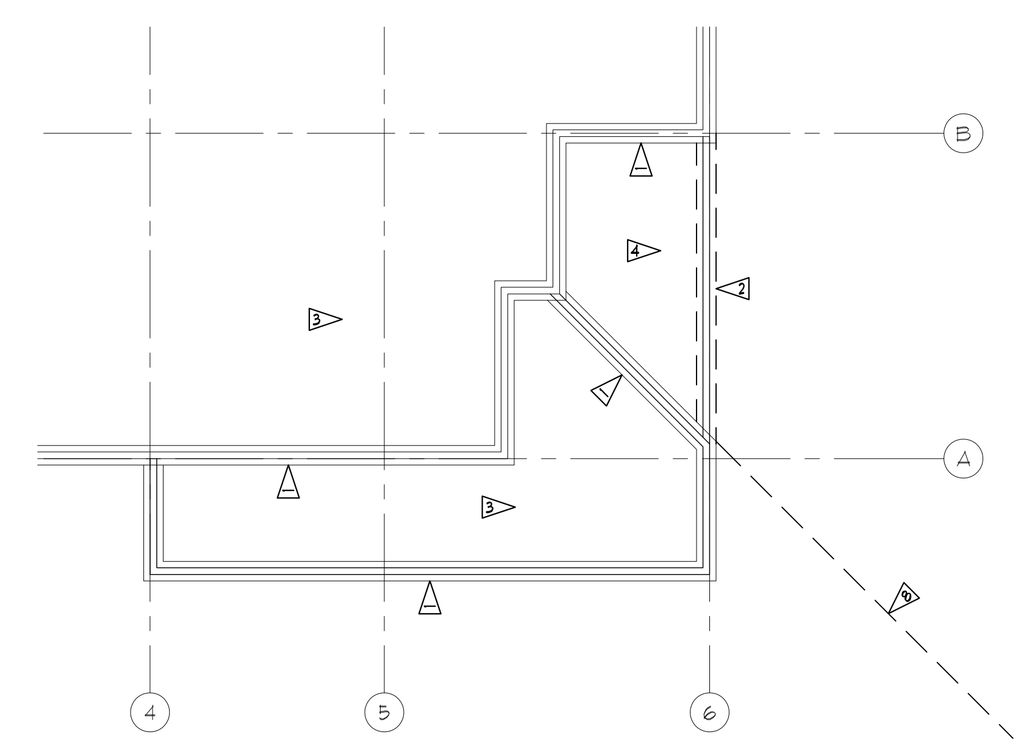

2/A1 Partial Foundation/Floor Framing Plan
Scale: ⅛" = 1'-0"

IF THIS SHEET IS LESS THAN 22"X34" IT IS A REDUCED PRINT - SCALE ACCORDINGLY

ROBIN Johnson
16922 Hanson Drive
EagleRiver Alaska 99577
(907) 223-4381 robinr@mtaonline.net

Dillingham Senior Center
Dillingham, AK

NO.	REVISION	DATE

JOB NO.	16094
DATE	10/19/16
DRAWN	RRJ
REVIEWED	RRJ

SHEET TITLE:
FLOOR PLAN,
PARTIAL FOUNDATION/FLOOR FRAMING PLAN,
PARTIAL ROOF PLAN

SHEET NO.
A1