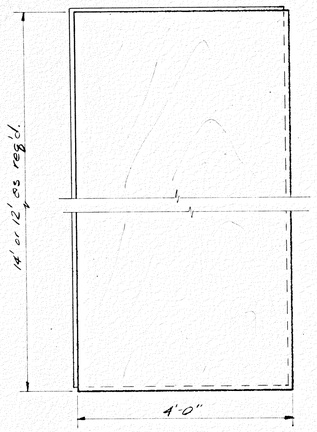

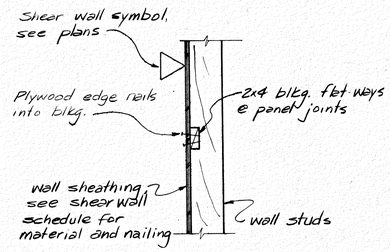

D TYP SHEAR WALL BLKG.

NTS

SHEAR WALL AND DIAPHRAGM SCHEDULE

Mark	Material	Field Nailing	Edge Nailing	Blocking @ panel edges	Anchor Bolts
1	1/2" plywd.	8d @ 12" o.c.	8d @ 6" o.c.	blkg. req'd.	5/8" ϕ @ 4'-0 o.c.
2	1/2" plywd.	"	8d @ 3 1/2" o.c.	blkg. req'd.	5/8" ϕ @ 4'-0 o.c.
3	1/2" plywd.	"	8d @ 2" o.c.	blkg req'd.	5/8" ϕ @ 2'-0 o.c.
Mezzanine Diaphragm	2-4-1 plywd.	8d rinkshank @ 10" o.c.	8d ringshank @ 6" o.c.	none	—
Roof diaphragm	Stressed-Skin Panels	none	8d @ 4" o.c. ea. layer	see gen. note	—
Roof diaphragm			(see details)		

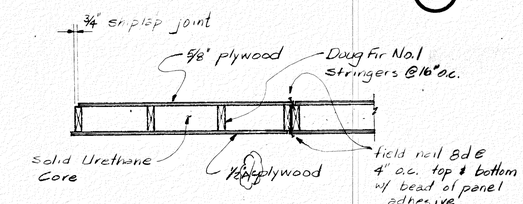

A TYP STRESSED-SKIN PANEL

NTS

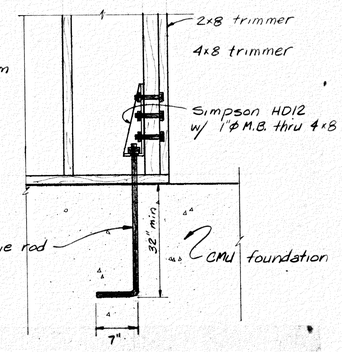

E TYP SHEAR WALL HOLDDOWN

NTS

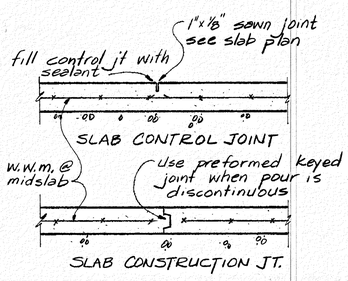

B TYP SLAB JOINTS

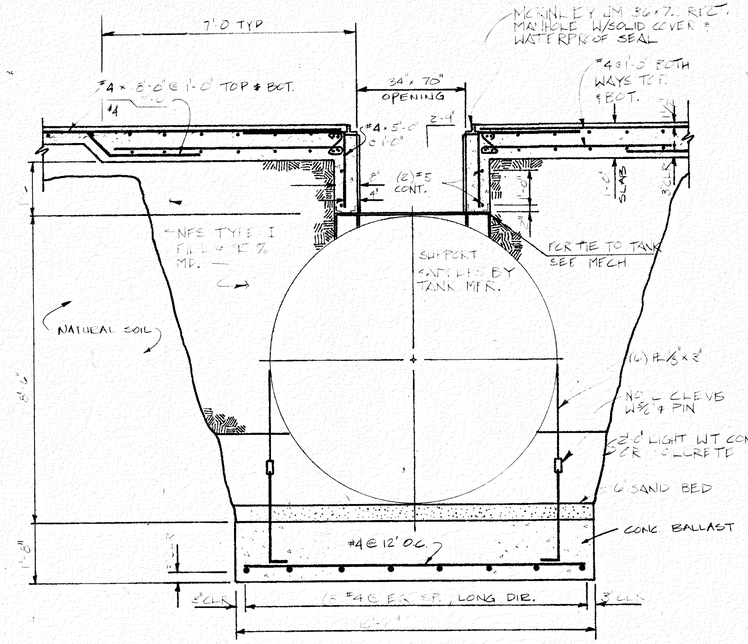

G BURIED WATER STORAGE TANK

1/2" = 1'-0"

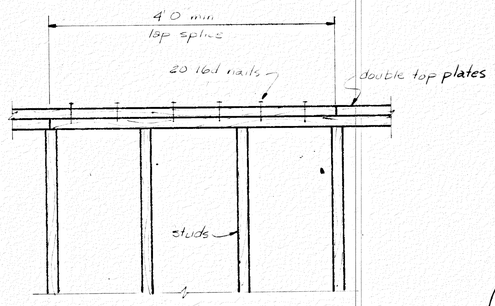

C TYP TOP PLATE SPLICE

NTS

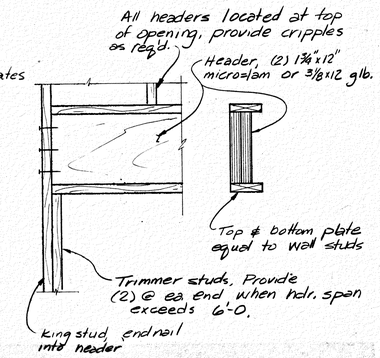

F TYP HEADER

NTS

FOUNDATIONS

a. FOUNDATION DESIGN IS BASED ON SOIL CLASSIFICATION CONTAINED IN GEOTECHNICAL REPORT BY HAROLD GALLIETT DATED JULY 2, 1984, AND THE ALLOWABLE BEARING PRESSURE CONTAINED IN THE 1982 UBC FOR SOIL TYPE 4. MAXIMUM SOIL BEARING PRESSURE = 2000 PSF AT DEPTH SHOWN ON DRAWINGS ON COMPACTED STRUCTURAL FILL.

b. IF OLD SOIL TEST TRENCHES ARE ENCOUNTERED DURING EXCAVATION, REMOVE ALL LOOSE FILL MATERIAL DOWN TO UNDISTURBED SOIL AND RECOMPACTED IN 12" LIFTS TO 95% MDD.

c. FOUR FOUNDATIONS ON A STRUCTURAL FILL 1 FT. WIDER IN ALL DIMENSIONS THAN THE FOOTING. THE STRUCTURAL FILL SHOULD BE NFS TYPE I MATERIAL, A MINIMUM OF 12" THICK AND COMPACT IN 6" LIFTS TO A MINIMUM OF 95% MDD.

d. UNDER FLOOR SLABS, REMOVE ORGANICS, FROZEN MATERIAL, PROOF ROLL, PROVIDE 6" SAND LEVELING COURSE AND COMPACT TO 95% MMD.

e. BACKFILL AROUND BURIED WATER STORAGE TANK SHALL BE NFS TYPE I MATERIAL COMPACTED TO 95% MDD. A SOIL CEMENT MIXTURE SHOULD BE USED FOR THE FIRST 2 FEET OF FILL TO ASSURE SUPPORT UNDER THE TANK.

STRUCTURAL NOTES

ALL MATERIALS, WORKMANSHIP AND CONSTRUCTION METHODS SHALL BE IN ACCORDANCE WITH THE STRUCTURAL DRAWINGS, SPECIFICATIONS AND NOTES LISTED BELOW. MINIMUM PROVISIONS OF THE UNIFORM BUILDING CODE, 1982 EDITION, AND LOCAL AMMENDMENTS SHALL APPLY WHERE DETAILS ARE NOT SHOWN OR DESCRIBED. OTHER APPLICABLE CODES AND STANDARDS ARE GIVEN BELOW.

DESIGN LOADS

a. LIVE LOADS
   1. ROOF LL (SNOW) - 40 PSF
   2. MEZZANINES - 125 PSF

b. WIND LOADS 100 MPH PER UBC METHOD 1

c. SEISMIC LOAD
   1. ZONE 2 (BOX SYSTEM)
   2. K=1.0

PLYWOOD STRESSED-SKIN/URETHANE CORE PANELS

a. PLYWOOD STRESSED-SKIN PANELS SHALL BE DESIGNED AND FABRICATED IN ACCORDANCE WITH THE APA PLYWOOD DESIGN SPECIFICATION, SUPPLEMENT NO. 3, #4.

b. THE MANUFACTURER SHOULD SUMBIT CALCULATIONS AND SHOP DRAWINGS SHOWING GRADES OF MATERIALS USED, PANEL LAYOUT AND ATTACHMENTS.

CONCRETE

a. FOUNDATIONS, FLOOR SLABS, STRUCTURAL CONCRETE, AND TOPPING SLABS SHALL BE Fc=3000 PSI @ 28 DAYS WITHA MINIMUM OF 5-1/2 SACKS OF CEMENT PER CU. YARD AND A MAXIMUM OF 6-3/4 GAL. OF WATER PER SACK.

b. CONCRETE SHALL BE KEPT MOIST AT LEAST 7 DAYS AFTER POURING, AND PROTECTED FROM FREEZING OR RAPID DRYING.

c. CONCRETE QUALITY AND PLACEMENT SHALL BE SUBJECT TO INSPECTION BY AN APPROVED TESTING LABORATORY.

MASONRY

a. MASONRY WALLS AND FOUNDATIONS SHALL BE 8" STD. CMU. ASTM C90. GRADE N-1. MOTAR SHALL BE ASTM C270 TYPE M GROUT.

b. ALL CORES WITH METAL INSERTS OR REINF. STEEL SHALL BE GROUTED SOLID.

c. MINIMUM REINFORCING SHALL BE AS FOLLOWS:
   1. (1) #5 VERT. @32" O.C. AND (1) #5 HORIZ. @ 48" O.C.
   2. (2) #5 IN BOND BEAM AT TOP OF ALL WALLS, AND AT FLOOR AND ROOF LEVELS.
   3. (2) #5 VERT. AT SIDES OF OPENINGS, ENDS AND CORNERS OF WALLS.
   4. MINIMUM HORIZONTAL REINF. AT TOPS OF OPENINGS SHALL BE (2) #5.

d. REINFORCING SHALL BE CONTINUOUS WITH 2-6" LAP SPLICES.

e. ALL CONSTRUCTION SHALL BE IN CONFORMANCE WITH AMERICAN CONCRETE INSTITUTE (ACI 531-79) (REVISED 1981).

REINFORCING STEEL

a. ALL REINFORCING STEEL NO. 4 AND LARGER SHALL BE DEFORMED BILLET STEEL A615-76 GRD. 60; NO.3 AND SMALLER, GDR. 40; NEW CLEAN AND FREE FROM DIRT AND RUST

b. SPLICES WHERE LOCATED AND APPROVED SHALL BE A MINUMUM OF 12" OR 40 BAR DIAMETERS; AND IN ACCORDANCE WITH ACI 318-83.

c. ALL REINFORCING SHALL BE SECURELY TIED WITH #16 ANNEALED IRON WIRE AND SUPPORTED ON METAL CHAIRS OR CONCRETE BLOCKS.

d. WELDED WIRE FABRIC ASTM A185; COMPLYING WITH THE MANUAL OF STANDARD PRACTICE OF THE WIRE REINFORCEMENT INSTITUTE.

STRUCTURAL STEEL

a. STRUCTURAL STEEL SHAPES AND PLATES SHALL BE ASTM A36. Fy=36 KSI; NEW, CLEAN AND RUST FREE.

b. STEEL TUBE COLUMNS SHALL BE ASTM A500 GRD. B. Fy=46 KSI.

c. ALL STRUCTURAL STEEL CONSTRUCTION SHALL COMPLY WITH THE AMERICAN INSTITUTE OF STEEL CONSTRUCTION. "SPECIFICATION FOR THE DESIGN, FABRICATION, AND ERECTION OF STRUCTURAL STEEL FOR BUILDINGS" (1978).

e. ALL STRUCTURAL WELDING SHALL BE BY CERTIFIED WELDERS. MINIMUM WELD SIZE 3/16". E70XX ELECTRODE.

f. ALL BOLTS NOTED AS M.B. OR A.B. SHALL BE ASTM A307.

g. CLEAN AND PAINT ALL STRUCTURAL STEEL AFTER FABRICATION WITH (1) SHOP COAT OF LEAD BASED PRIMER.

PLYWOOD

a. PLYWOOD SHEATHING SHALL CONFORM TO U.S. PRODUCT STD. PS 1-74 AND HAVE PROPERTIES LISTED IN THE TABLE BELOW.
   1. SHEAR WALL 1/2" CD-X INT-APA 24/0
   2. FLOOR 1-1/8" T&G UNDERLAYMENT-APA 2.4.1
   3. SEE NOTE ON STRESSED-SKIN PANELS FOR ROOF PLYWOOD

b. SEE DRAWINGS FOR NAILING REQUIREMENTS. MINIMUM NAILING SHALL BE 8d AT 6" O.C. AT ALL SUPPORTED EDGES AND 12" O.C. THROUGH FIELD.

c. ALL PLYWOOD USED IN SHEAR WALLS SHALL BE BLOCKED AT THE FREE EDGES.

LUMBER AND TIMBER

a. STRUCTURAL LUMBER AND TIMBER TO BE HEM-FIR OR DOUG. FIR WITH THE FOLLOWING PROPERTIES:

1. BEAMS & HEADERS	DOUG. FIR	NO.1	Fb= 1450 PSI
2. STRUCTURAL STUDS	HEM-FIR	NO.2	1000 PSI
3. JOISTS	HEM-FIR	NO.2	1000 PSI
4. POSTS	DOUG. FIR	NO.1	1150 PSI

b. UNLESS NOTED OTHERWISE, CONFORM TO NAILING SCHED. (TABLE 25-F) UBC.

c. METAL FRAMING ANCHORS AND HANGERS SHALL BE "SIMPSON STRONG TIE" OR APPROVED EQUAL.

d. SOLID 2x_ BLOCKING SHALL BE PROVIDED AT THE ENDS AND AT ALL SUPPORTS OF JOISTS AND RAFTERS.

GLUE-LAMINATED STRUCTURAL MEMBERS

a. ALL STRUCTURAL GLUE-LAMINATED TIMBER SHALL BE AS DETAILED ON THE DRAWINGS AND CONFORM TO THE VOLUNTARY PRODUCT STANDARD PS 56-79.

b. ADHESIVES SHALL BE FOR WET USE. SURFACES OF MEMBERS SHALL BE SEALED WITH A SEALER COAT AND MEMBERS SHALL BE INDIVIDUALLY WRAPPED WITH A PROTECTIVE COVERING.

c. MEMBERS SHALL HAVE THE FOLLOWING ALLOWABLE WORKING STRESS VAULES FOR NORMAL DURATION LOADING:
   1. BENDING 2400 PSI
   2. HORIZ. SHEAR 165 PSI
   3. COMP. PERP. TO GRAIN 385 PSI
   4. COMP. PARALLEL TO GRAIN 1500 PSI
   5. MODULUS OF ELASTICITY 1800 KSI

d. APPEARANCE GRADE SHALL BE ARCHITECTURAL.

STATE OF ALASKA
F. Charles Keeley
CE 6251
REGISTERED PROFESSIONAL ENGINEER

DILLINGHAM FIRE STATION

project title:

SELBERG ASSOCIATES INC.
p.o. box 872708
wasilla, alaska
99687
907-376-4999

project no.: 840355
date: ~~6/29/84~~ 7/7/
drawn by: FCK
revised: 1.30.85
sheet title: GENERAL NOTES TYP. DETAILS
sheet no: S1
of 3

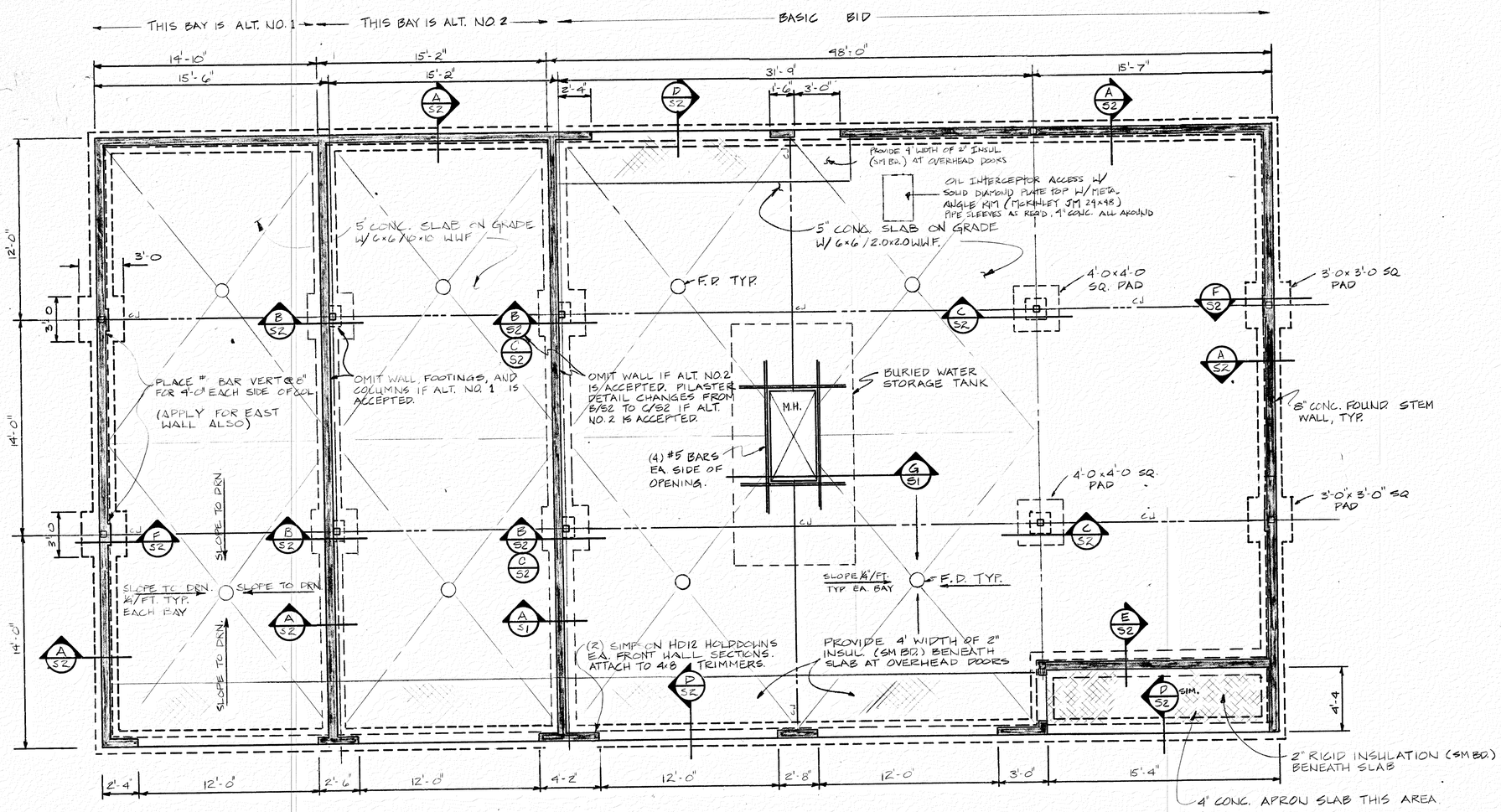

FOUNDATION PLAN
1/4" = 1'-0"

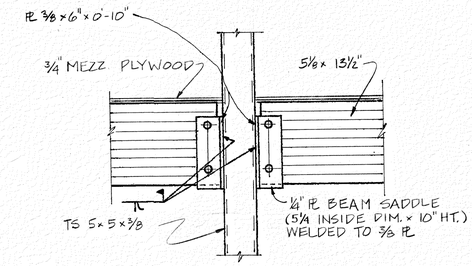

G BEAM-TO-COL. CONN.
1" = 1'-0"

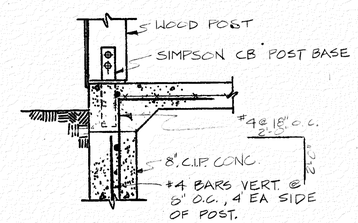

F POST BASE
1" = 1'-0"

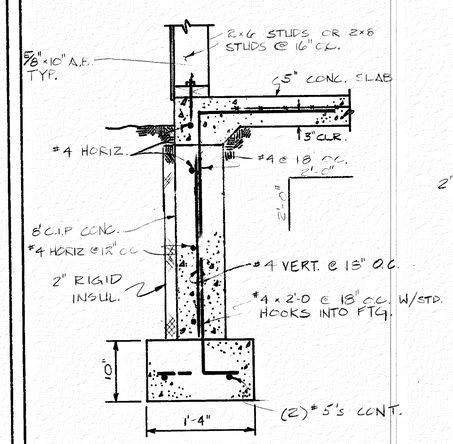

A TYP. FND. SECT.
1" = 1'-0"

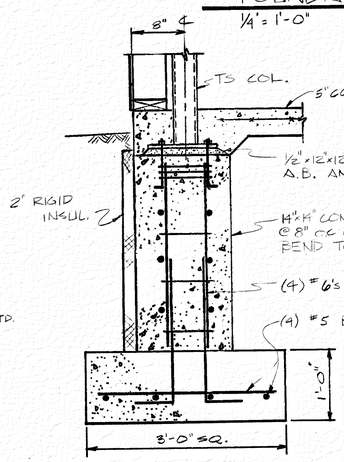

B PILASTER DETAIL
1" = 1'-0"

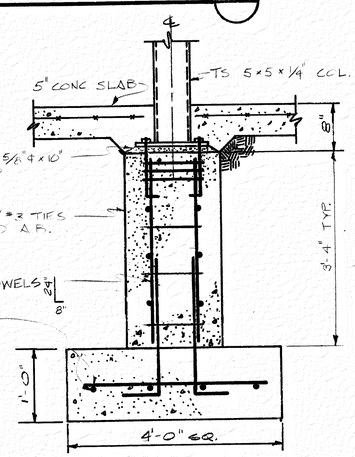

C PILASTER DETAIL
1" = 1'-0"

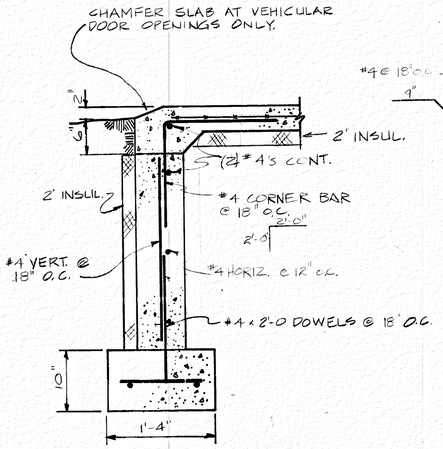

D FND. AT DOOR
1" = 1'-0"

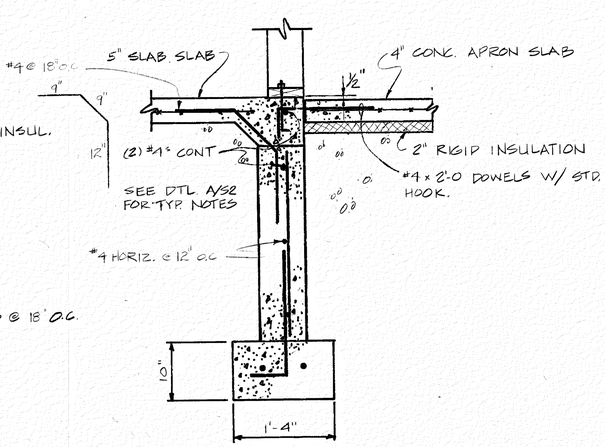

E FND. SECTION
1" = 1'-0

STATE OF ALASKA 49TH
F. Charles Kenley CE 6251
REGISTERED PROFESSIONAL ENGINEER

project title: DILLINGHAM FIRE STATION

SELBERG ASSOCIATES INC.
p.o. box 872708
wasilla, alaska
99687
907-376-4999

project no.: 84055
date: 7/17/84
drawn by: TIM KELLY
revised: 1/4/84
To conc. found. 1-30-85
sheet title: FOUNDATION PLAN & DETAILS
sheet no: S2
of 3

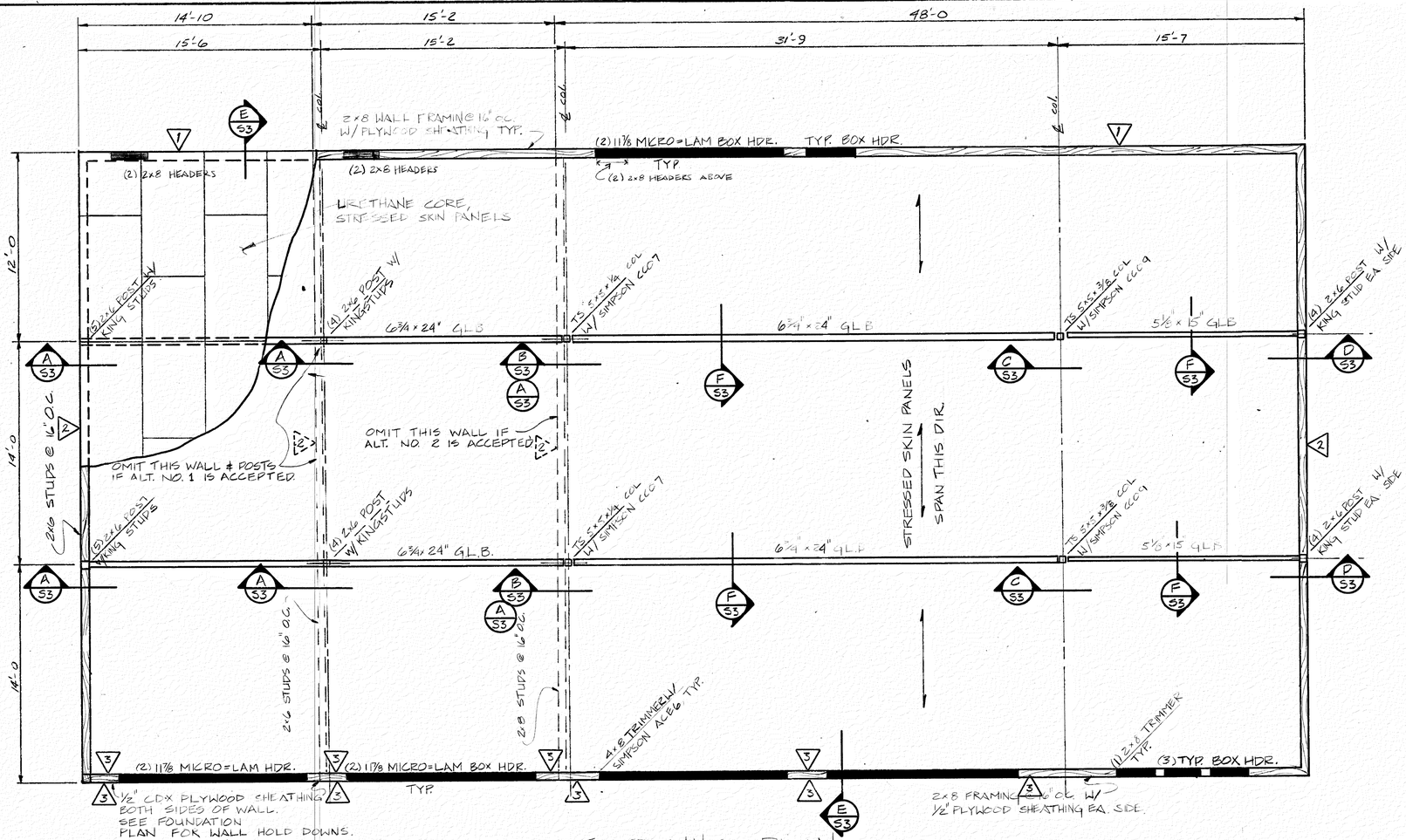

ROOF FRAMING PLAN

1/4" = 1'-0"

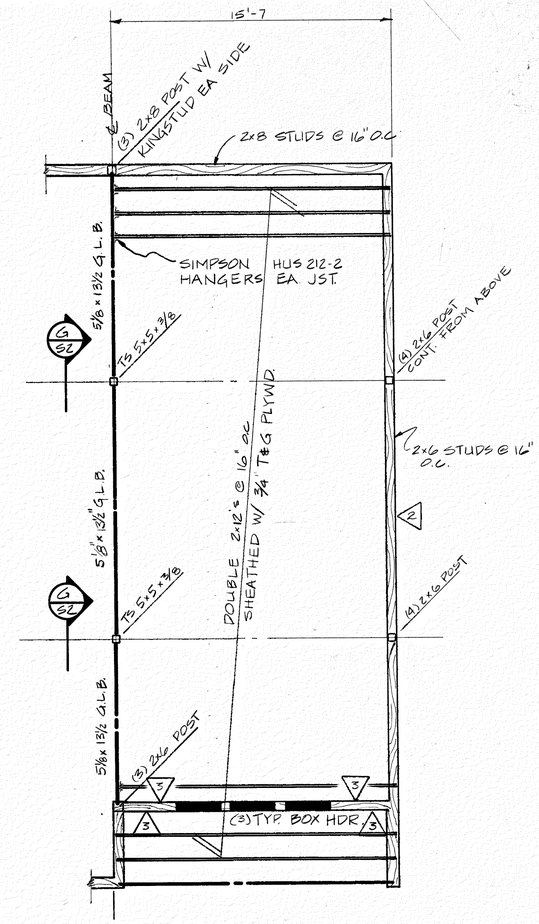

MEZZ. FRAMING PLAN

1/4" = 1'-0"

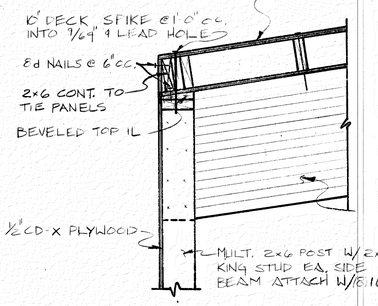

A END BEAM CONN.

1" = 1'-0"

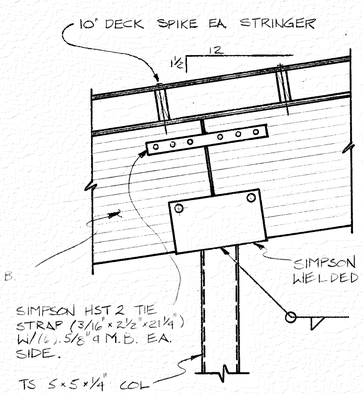

B INT. COL. SECTION

1" = 1'-0"

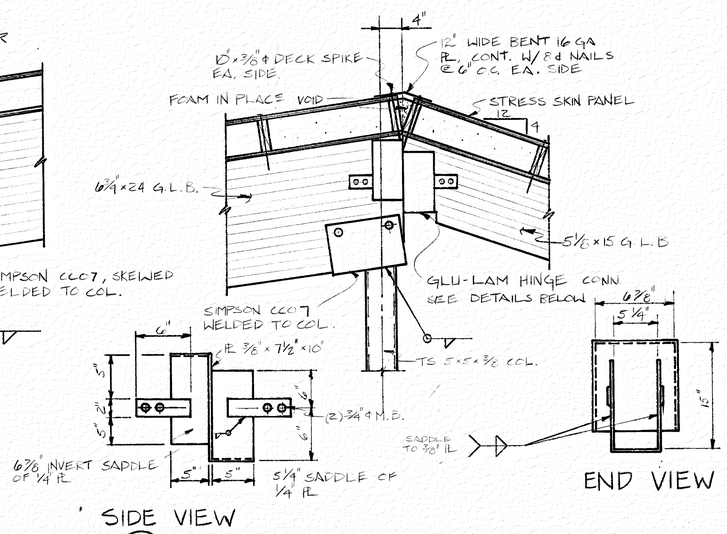

C INT. COL. SECTION

1" = 1'-0"

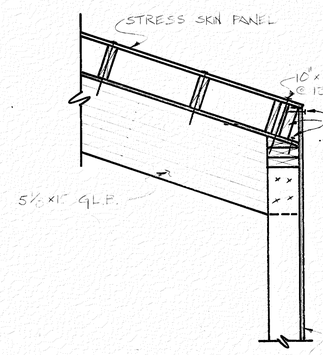

D BEAM CONN.

1" = 1'-0"

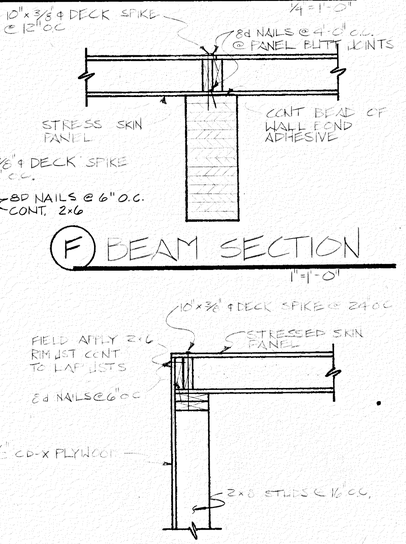

F BEAM SECTION

1" = 1'-0"

E ROOF SECTION

1" = 1'-0"

STATE OF ALASKA 49TH
P. Charles Kenley
CE 6251
REGISTERED PROFESSIONAL ENGINEER

DILLINGHAM FIRE STATION

project title:

SELBERG ASSOCIATES INC.

p.o. box 872708
wasilla, alaska
99687
907-376-4999

project no.: 241035
date: 7/17/94
drawn by: TIM KELLY
revised: 1-30-95
sheet title: ROOF FRAMING PLAN & DETAILS
sheet no: S3
of 3